computar

H21Z1015AMSP

21X 10mm-210mm F1.5
for 1/2 type Cameras, Motorized Zoom
C-Mount

with Video Auto Iris and Preset

Model No.		H21Z1015AMS		Effective Lens Aperture	Front	φ65mm	
Focal Length		10mm - 210mm			Rear	φ11.5mm	
Max. Aperture Ratio		1:1.5		Back Focal Length		13.91mm	
Max. Image Format		6.4mm x 4.8mm(φ8mm)		Flange Back Length		17.526mm	
Operation Range	Iris	F1.5 - F1000 (W/ND Filter)		Mount		C-Mount	
	Focus	2m - Inf.		Filter Size		M72 P=0.75mm	
	Zoom	10mm - 210mm		Tripod Screw		1/4 -20UNC	
Control	Iris	Video Auto Iris		Dimensions		W84mm x H94.5mm x D169mm	
	Focus	Motorized		Weight		1100g	
	Zoom	Motorized					
Object Dimension at M.O.D.	10mm	120.2cm X 89.6cm					
	210mm	5.9cm X 4.4cm					
Angle of View	D	1/2 type	44.2° -2.7°	1/3 type	33.4° -1.67°	1/4 type	25.0° - 1.25°
	H		35.6° - 1.78°		26.8° - 1.35°		20.2° - 1.02°
	V		26.8° - 1.35°		20.2° - 1.02°		15.2° - 0.77°
		Iris		Focus		Zoom	
Supply Voltage		DC6-12V		DC6-12V		DC6-12V	
Current		40mA or less		40mA or less		40mA or less	
Response Time		4-8 sec.		8-16 sec.		7.5-15 sec.	
Preset Potentiometer		-		10kΩVR		10kΩVR	
Light Weighting method		Adjustable between Average-Peak (to be set at Average at Factory)					
Input Signal		Video Signal (V. or V.S.)					
Iris Accuracy		±15% at Video Signal Level					
Sensitivity Adjustment		0.4V(p-p) - 1.0V(p-p) (Video Signal)					
Input Impedance		High Impedance					
Operating Temperature		-10℃ - +50℃					

1/2 type

C

Dimensions

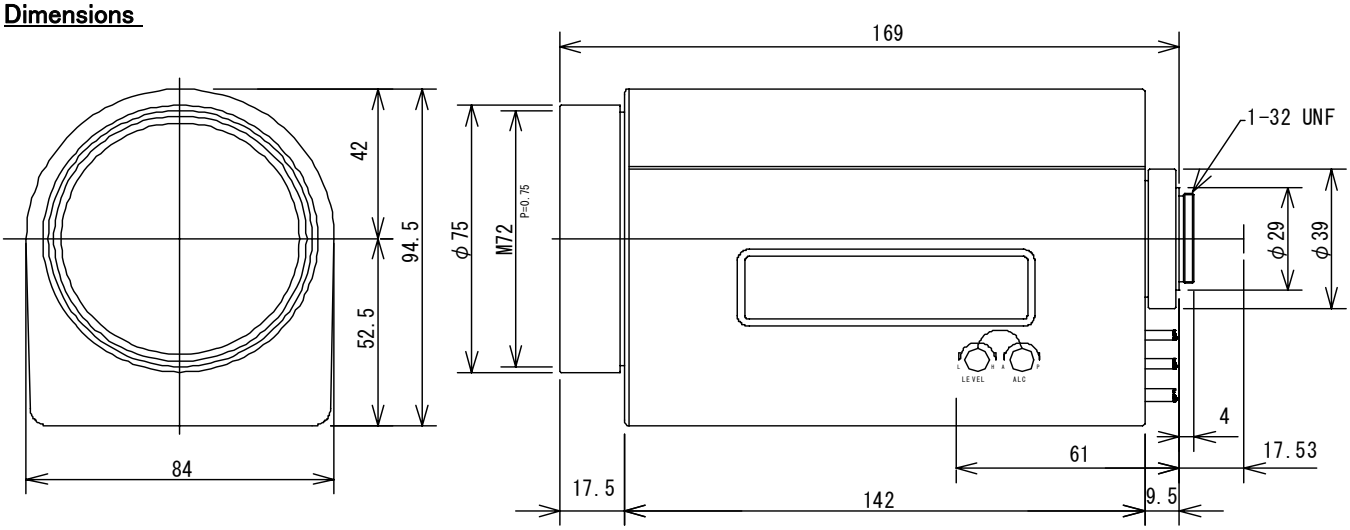

Wiring Diagram

Iris, Focus & Zoom

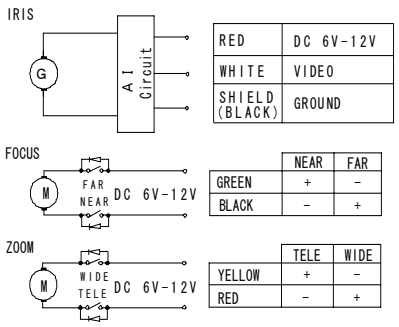

Potentiometer

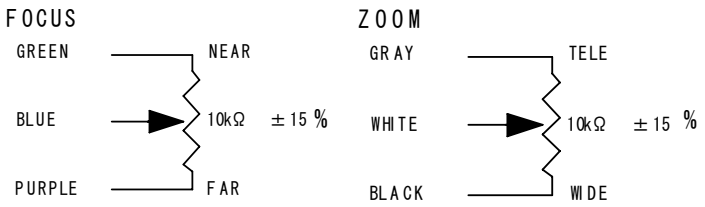

2008.08

Specification is subject to change without any notice.